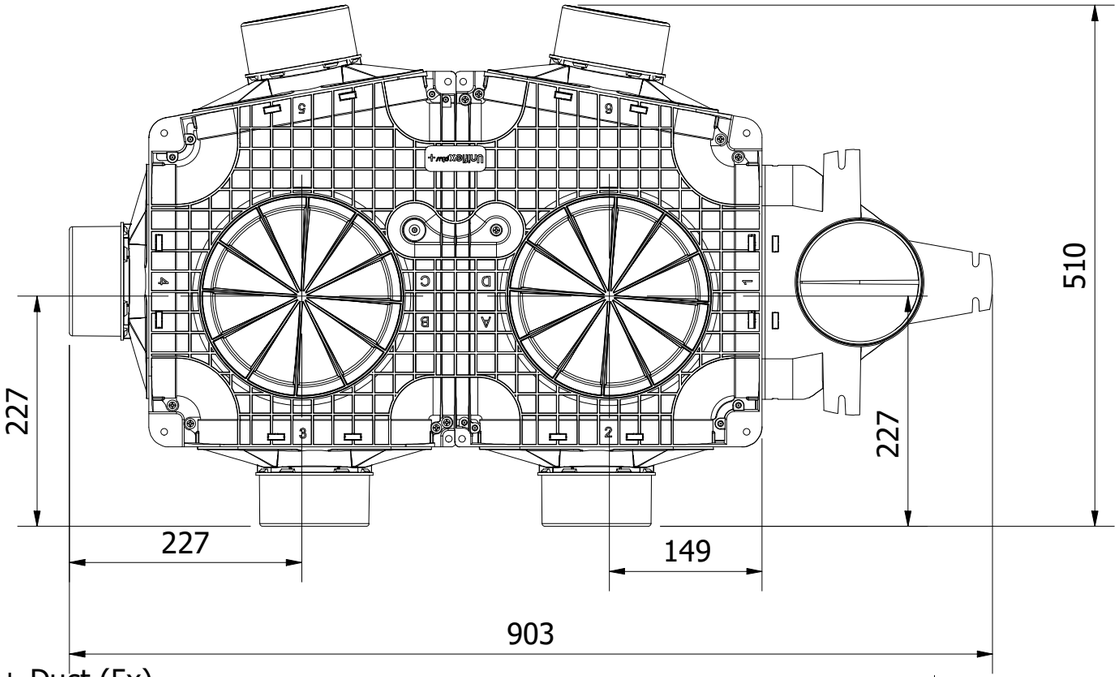

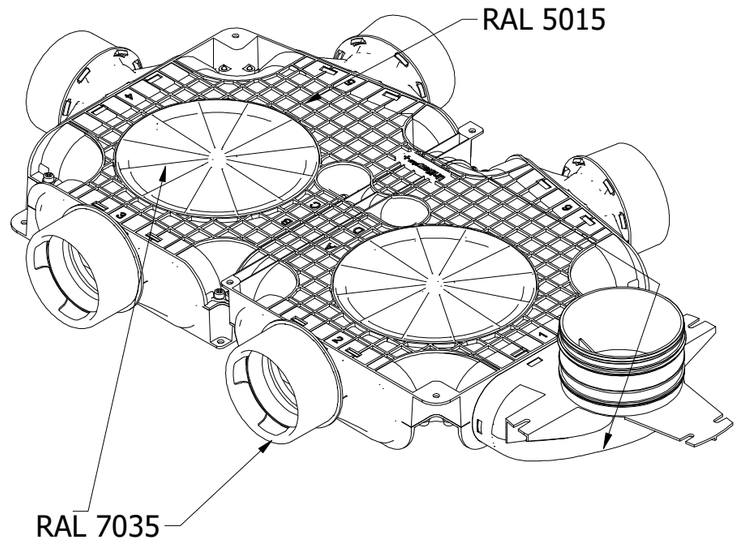

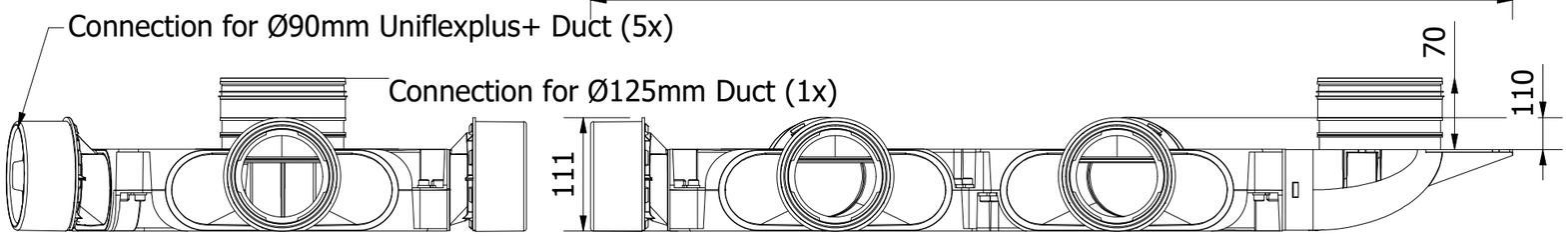

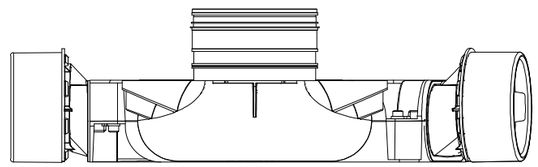

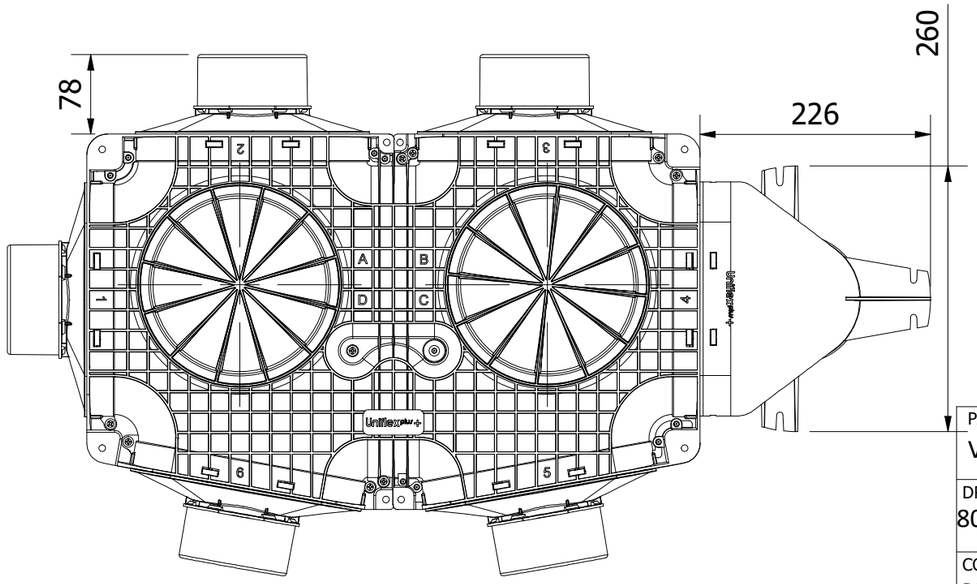

PART NAME VK99999.DDDDV Instortverd. 1xK 5xØ90 4xD + VØ125				
DRAWING NUMBER 8000000967		MATERIAL Mixed		
COLOUR RAL 7035/5015		DATE 21/03/2019		
SCALE 1:6	PROJ A-A	UNITS mm	SIZE A3	

REVISION HISTORY

REV	DATE	DESCRIPTION	BY
1	25-02-2022	Connection for Ø125mm Duct rotated by 180 °.	RGI

DRAWN BY
Vent-Axia.